1633 Staunton Ave
Los Angeles, CA 90021
TEL. (800) 727-9262 (213) 747-4500
FAX. (800) 727-9957 (213) 747-3234
E-Mail: sales@coronalighting.com

SPECIFICATION SHEET

PRODUCT # : CL-106-BT-AB

• Down Lights • Cast Brass

Fixture Specifications:

Housing: Corrosion Resistant Cast Brass

Finish: **AB**- Antique Bronze
Natural Toning process, color may vary.
Also availble in **GM**- Gun Metal

Lens: Clear, Convex Glass Lens.
15º & 60º reflectors included (see page 2)

Light Source: Replacable 1-6W RGB LED module. Lumen output is between 15LM - 450LM. Standard 38º beam spread, with 15º & 60º options also included.

LED Features: CCT Options: Presets: 2200K, 2700K, 3000K, 4000K, 5000K, 5700K
Dimming: With every color temperature
Scenes: Customizable scenes with up to 8 color temperatures.
Compatibility: Amazon's Alexa* and Google Home*
*(*CX-BTG-2 gateway required, see below)*
Music: The lights will follow music collected by a device's microphone.

Gasket: Silicone double gasketed for water-tight sealing

Connection: Bluetooth Mesh, R*ange Extender (**CX-BTE**) is highly recommended, see below for details.*

Knuckle: Swivel cast brass knuckle with thumb screw and ½" NPT threaded male hub on bottom.

Wiring: Fixture is prewired with a 10ft 18-2 SPT-2W direct burial cord. Wire connector sold seperately. Quick-locking connectors are available from Corona Lighting (**CX-LOC**) find details on page 2.

Mounting: Brass mounting bracket with ½" NPT threaded female hub. **CX-709B** Brass Canopy mounting is also available.

Electrical Notes: A remote 12V transformer is required. Options are available from Corona Lighting (see page 3). Voltage range for LED module is 10V-15V (10VA). Proper grease/lubricant is suggested on threaded parts during installation process.

Warranty: Lifetime limited warranty on fixture housing. Ten (10) years warranty on LED module.



AB Finish Shown

LED
1W - 6W

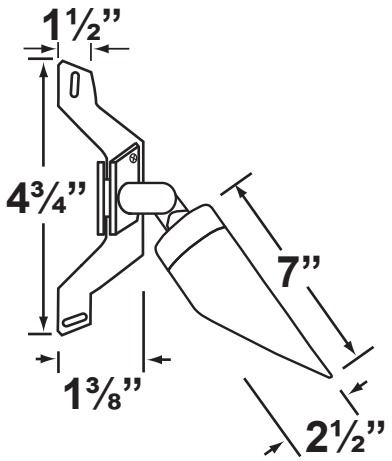

SMART ACCESSORIES

CX-BTE Bluetooth Range Extender

CX-BTG-2 Wireless Bluetooth Mesh Gateway

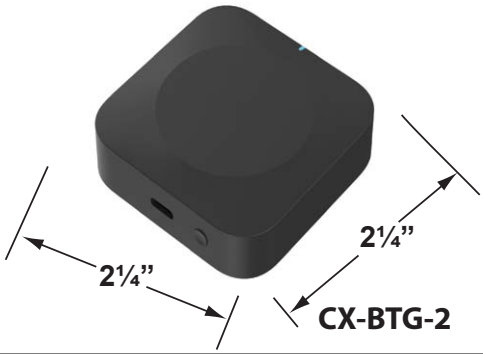



JOB INFORMATION

TYPE: **DATE:**

JOB NAME & ADDRESS:

PRODUCT #:

TOTAL QUANTITY:

LAMP TYPE & WATTAGE:

TRANSFORMER:

CONTRACTOR:

SPECIFIER:

• Corona Lighting reserves the right to make any change and/or improvement to the design and construction of this fixure without further notification.

FIAT LUX By CORONA Lighting

1633 Staunton Ave
Los Angeles, CA 90021
TEL. (800) 727-9262 (213) 747-4500
FAX. (800) 727-9957 (213) 747-3234
E-Mail: sales@coronalighting.com

ACCESSORIES SHEET

PRODUCT # : CL-106-BT-AB

Down Lights • **Caat Brass**

Cable Connectors

CX-LOC Quick-locking Cable Connectors, **Tan**
(Installation Instructions)

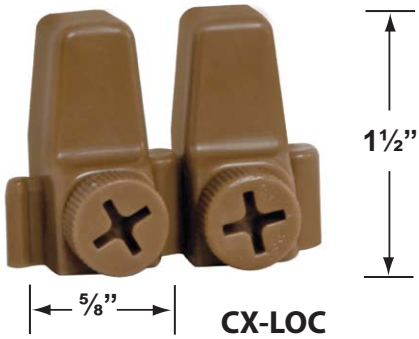

CX-LOC

Reflectors (Free Pack-in)

15D 15 º Reflector
60D 60 º Reflector


15D


60D

Mounting Canopies

CX-705B-AB Brass Flat Canopy, ½ NPT, **Antique Bronze**
CX-709B-AB Brass Raised Canopy, ½ NPT, **Antique Bronze**
CX-718B-AB 5” Brass Canopy, 3-Hole ½ NPT, **Antique Bronze**
CX-719B-AB Brass Tree Mounting Bracket, 1/2” NPT, **Antique Bronze**
CX-720-BR Brass Tree mount Canopy with 9" Rubber Strap stretches to 14, **Natural Brass**
CX-721-BR Brass Tree mount Canopy with 15" Rubber Strap stretches to 22", **Natural Brass**
CX-722-BR Brass Tree mount Canopy with 22" Rubber Strap stretches to 33", **Natural Brass**
CX-723-BR Brass Tree mount Canopy with 31" Rubber Strap stretches to 45", **Natural Brass**



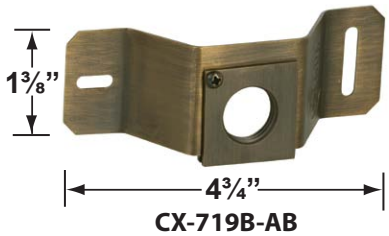

CX-719B-AB



CX-709B-AB

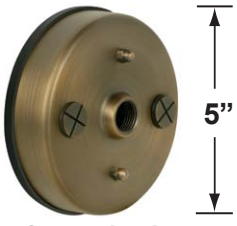

CX-718B-AB



CX-705B-AB

• Corona Lighting reserves the right to make any change and/or improvement to the design and construction of this fixure without further notification.

FIAT LUX By CORONA Lighting

1633 Staunton Ave
Los Angeles, CA 90021
TEL. (800) 727-9262 (213) 747-4500
FAX. (800) 727-9957 (213) 747-3234
E-Mail: sales@coronalighting.com

ACCESSORIES SHEET

PRODUCT # : CL-106-BT-AB

• Down Lights • Cast Brass

Stainless Steel Pool and Spa Rated Transformers

T-LT150-Z	150W, 12-15V Smart Zoning Single Circuit Transformer (Spec Sheet) | (Installation Instructions)
T-LT300-Z	300W, 12-15V Smart Zoning Single Circuit Transformer (Spec Sheet) | (Installation Instructions)
T-LTF60	60W, 12V, Compact Mini Transformer
T-LT75	75W, 12 and 15V, Single Circuit Transformer w/ Integrated Mechanical Timer.
T-LT150	150W, 12-15V, Single Circuit Transformer.
T-LT300	300W, 12-15V, Single Circuit Transformer.
T-LT600	600W, 12-15V, Dual Circuit Transformer.
T-LT900	900W, 12-22V, Triple Circuit Transformer.
T-FIDT	Field Installed Plug-in Digital Timer.
T-FIT	Field Installed Plug-in Mechanical Timer.
T-TR-FIP	Field Installed Plug-in Photocell



T-LT150-Z



T-FIDT



T-LT300-Z



T-LT300



T-LT75



T-LT150



T-TR-FIP

• Corona Lighting reserves the right to make any change and/or improvement to the design and construction of this fixure without further notification.